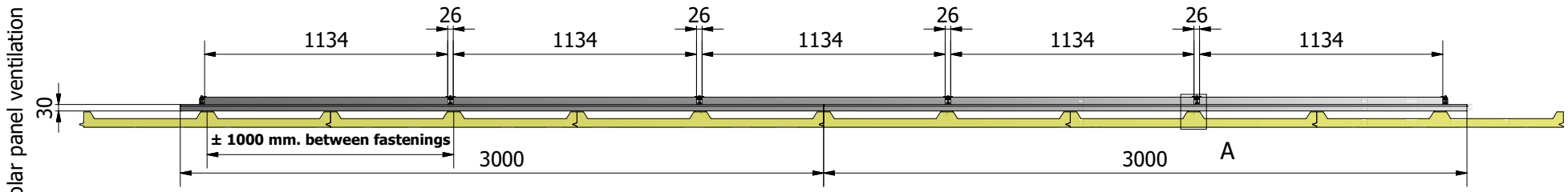

5-panel row type
Side view

Front view

*** Rotation speed for fastening self-tapping screws: 400 rpm**

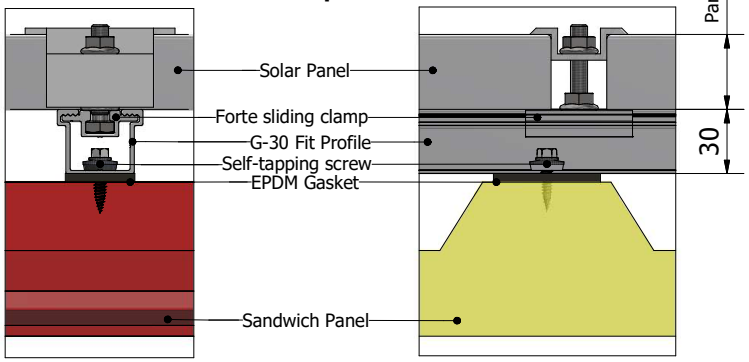

Detail B
Sheet fastening

Detail A
Sheet fastening

GULPIYURI-50 Fit Profile

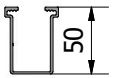

***Also available 50 mm. high GULPIYURI Fit profile**

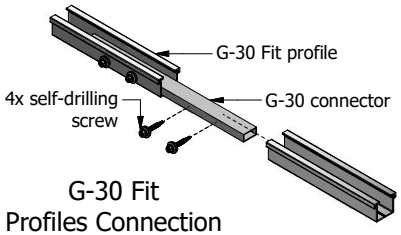

G-30 Fit
Profiles Connection

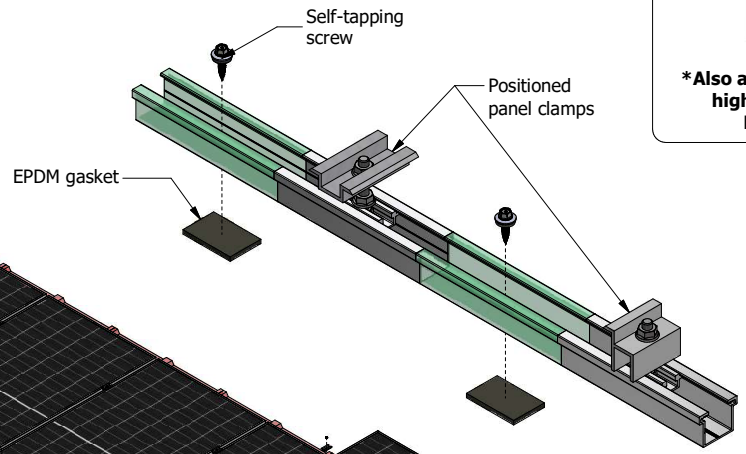

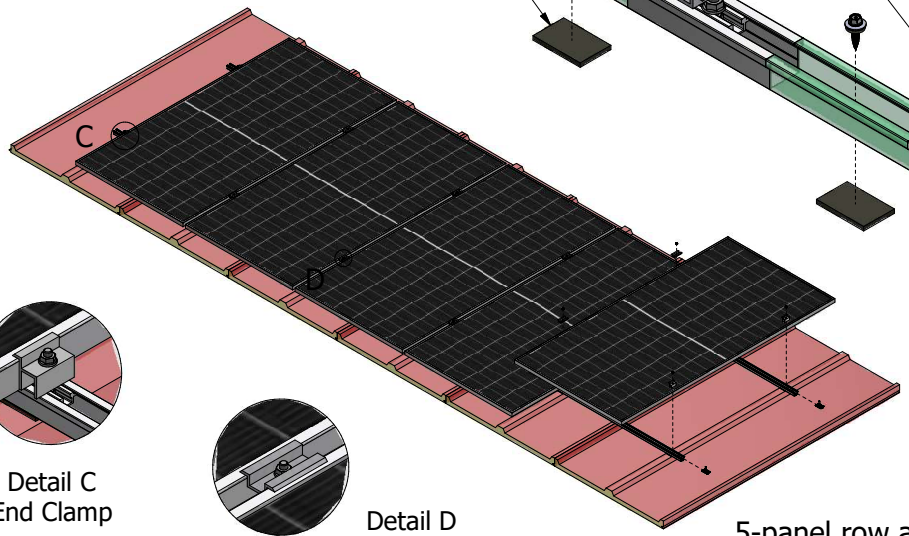

Detail C
End Clamp

Detail D
Intermediate Clamp

5-panel row assembly
Isometric View

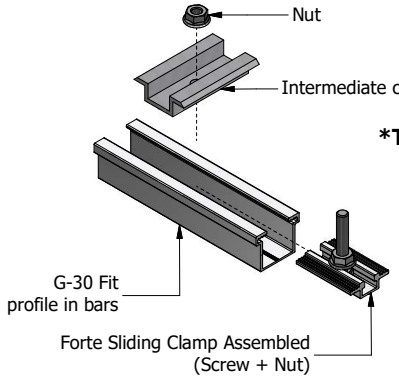

Intermediate clamp assembly

***Tightening torque Panel Clamps: 20 Nm**

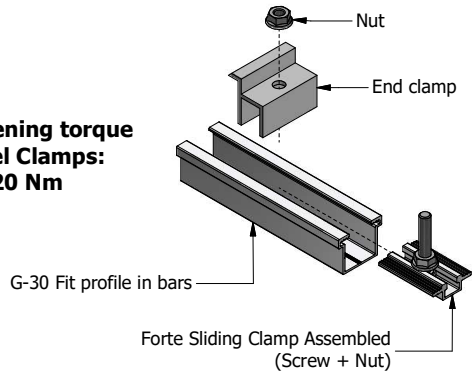

End clamp assembly

Designed by	Revised by	Approved by	Date
Angel Martínez	Marcelino Palacios	Javier Fernández-Font	18/05/2022

alusínsolar
solarstructures

GULPIYURI-30 Fit on Bars System

Ribbed instalation