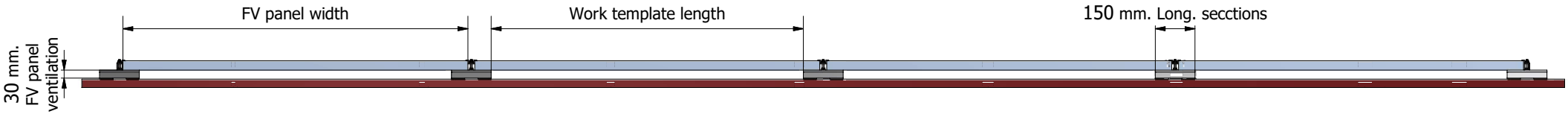

4 panel row. Side View.

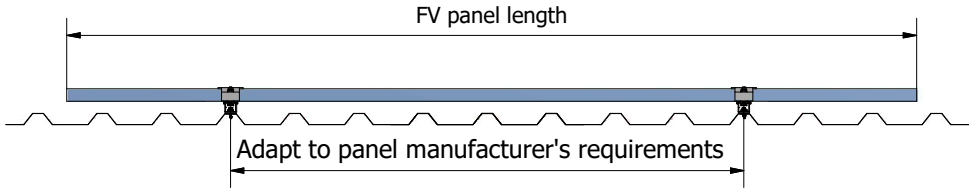

Front view

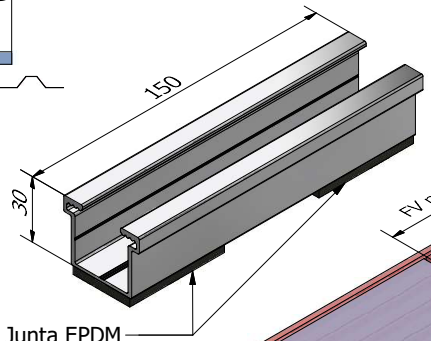

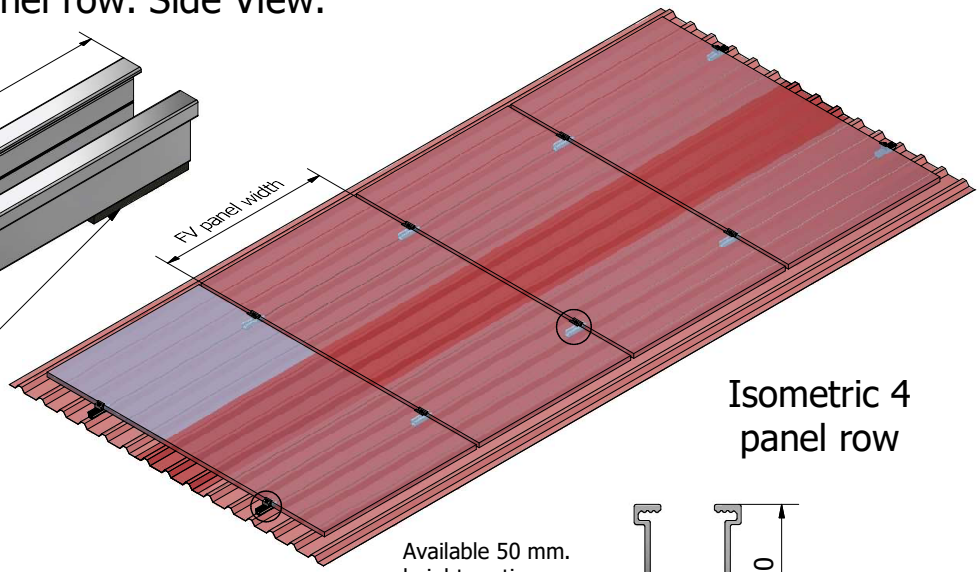

Isometric 4 panel row

The section is manufactured with 3 Ø6.5 mm. holes. The intermediate fastening is opcional.

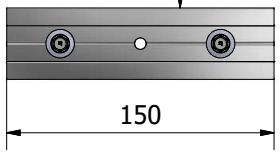

GULPIYURI-30 Fit sections

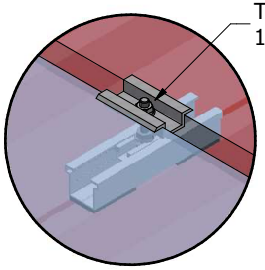

Intermediate Clamp

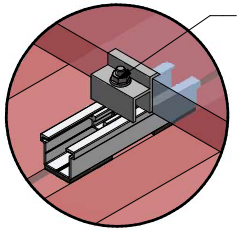

End Clamp

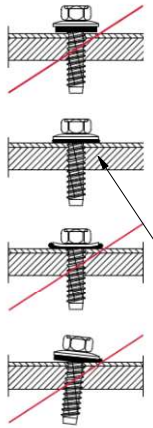

Available 50 mm. height section. **WITHOUT** die-cutting.

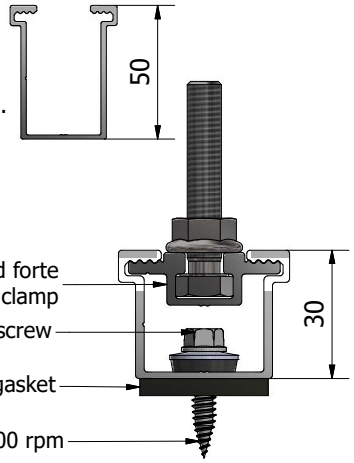

Section and sliding

Designed by	Revised by	Approved by	Date
Marcelino Palacios	J.M. Palacios	Javier Fernández-Font	07/12/2022

alusínsolar
solarstructures

Coplanar structure system.

GULPIYURI-30 System to Sections

Ribbed section installation.